D3163, OCTOBER 1988 – REVISED APRIL 1990

- 6-Bit Resolution
- Linearity Error . . . ±0.8%
- Maximum Conversion Rate . . . 30 MHz Typ
- Analog Input Voltage Range . . . V_{CC} to V_{CC} −2 V
- Analog Input Dynamic Range . . . 1 V
- TTL Digital I/O Level
- Low Power Consumption . . . 200 mW Typ
- 5-V Single-Supply Operation
- Interchangeable with Fujitsu MB40576

N PACKAGE
(TOP VIEW)

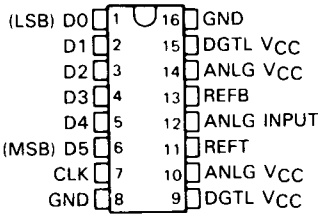

description

The TL5501 is a low-power ultra-high-speed video-band analog-to-digital converter that uses the Advanced Low-Power Schottky (ALS) process. It utilizes the full-parallel comparison (flash method) for high-speed conversion. It converts wide-band analog signals (such as a video signal) to a digital signal at a sampling rate of dc to 30 MHz. Because of this high-speed capability, the TL5501 is suitable for digital video applications such as digital TV, video processing with a computer, or radar signal processing.

The TL5501 is characterized for operation from 0°C to 70°C.

functional block diagram

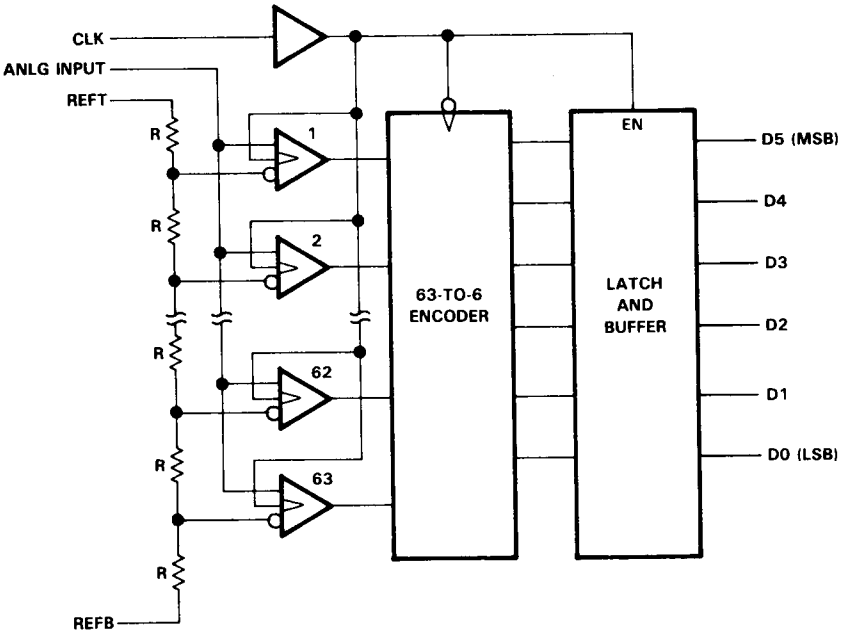

equivalents of analog input circuit

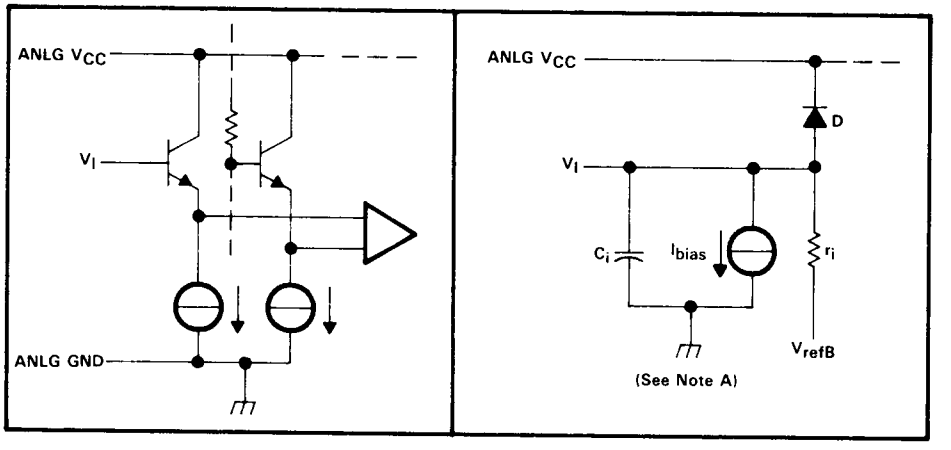

NOTE A: C_i – nonlinear emitter-follower junction capacitance
r_i – linear resistance model for input current transition caused by comparator switching. $V_I < V_{refB}$: Infinite; CLK high: Infinite.
V_{refB} – voltage at REFB terminal
I_{bias} – constant input bias current
D – base-collector junction diode of emitter-follower transistor

equivalent of digital input circuit

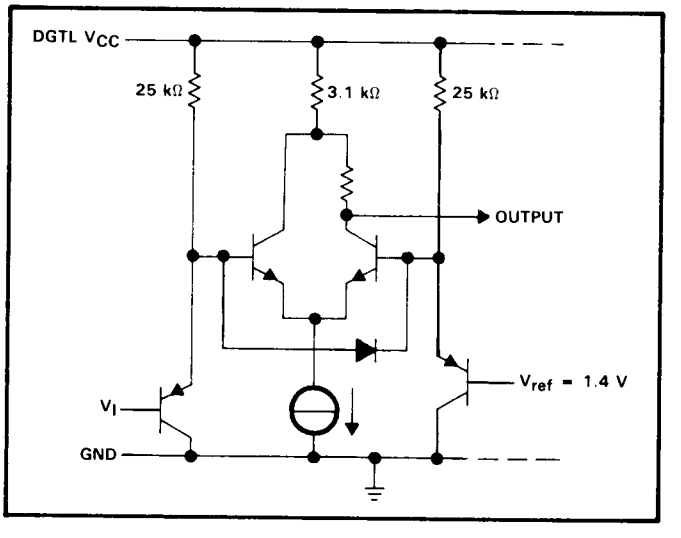

FUNCTION TABLE

STEP	ANALOG INPUT VOLTAGE†	DIGITAL OUTPUT CODE
0	3.992 V	L L L L L L
1	4.008 V	L L L L L H
.	.	
31	4.488 V	L H H H H H
32	4.508 V	H L L L L L
33	4.520 V	H L L L L H
.	.	
62	4.984 V	H H H H H L
63	5.000 V	H H H H H H

† These values are based on the assumption that V_{refB} and V_{refT} have been adjusted so that the voltage at the transition from digital 0 to 1 (V_{ZT}) is 4.000 V and the transition to full scale (V_{FT}) is 4.992 V. 1 LSB = 16 mV.

absolute maximum ratings over operating free-air temperature range (unless otherwise noted)

Supply voltage range, ANLG V_{CC} (see Note 1) . . . . . −0.5 V to 7 V
Supply voltage range, DGTL V_{CC} . . . . . −0.5 V to 7 V
Input voltage range at digital input, V_I . . . . . −0.5 V to 7 V
Input voltage range at analog input, V_I . . . . . −0.5 V to ANLG V_{CC} + 0.5 V
Analog reference voltage range, V_{ref} . . . . . −0.5 V to ANLG V_{CC} + 0.5 V
Storage temperature range . . . . . −55°C to 150°C
Operating free-air temperature range . . . . . 0°C to 70°C
Lead temperature 1,6 mm (1/16 inch) from case for 10 seconds . . . . . 260°C

NOTE 1: All voltage values are with respect to the network ground terminal.

recommended operating conditions

	MIN	NOM	MAX	UNIT
Supply voltage, ANLG V_{CC}	4.75	5	5.25	V
Supply voltage, DGTL V_{CC}	4.75	5	5.25	V
High-level input voltage, V_{IH}	2			V
Low-level input voltage, V_{IL}			0.8	V
Input voltage at analog input, V_I (see Note 2)	4		5	V
Analog reference voltage (top side), V_{refT} (see Note 2)	4	5	5.1	V
Analog reference voltage (bottom side), V_{refB} (see Note 2)	3	4	4.1	V
High-level output current, I_{OH}	−400			μA
Low-level output current, I_{OL}			4	mA
Clock pulse duration, high-level or low-level, t_w	25			ns
Operating free-air temperature, T_A	0		70	°C

NOTE 2: $V_{refB} < V_I < V_{refT}$, $V_{refT} - V_{refB} = 1\ V \pm 0.1\ V$.

electrical characteristics over operating supply voltage range, T_A = 25 °C (unless otherwise noted)

PARAMETER		TEST CONDITIONS	MIN	TYP	MAX	UNIT
I_I	Analog input current	V_I = 5 V			75	μA
		V_I = 4 V			73	
I_{IH}	Digital high-level input current	V_I = 2.7 V		0	20	μA
I_{IL}	Digital low-level input current	V_I = 0.4 V	−400	−40		μA
I_I	Digital input current	V_I = 7 V			100	μA
I_{refB}	Reference current	V_{refB} = 4 V		−4	−7.2	mA
I_{refT}	Reference current	V_{refT} = 5 V		4	7.2	mA
V_{OH}	High-level output voltage	I_{OH} = −400 μA	2.7			V
V_{OL}	Low-level output voltage	I_{OL} = 1.6 mA			0.4	V
r_i	Analog input resistance		100			kΩ
$1C_i$	Analog input capacitance			35	65	pF
I_{CC}	Supply current			40	60	mA

operating characteristics over operating supply voltage range, T_A = 25 °C (unless otherwise noted)

PARAMETER		TEST CONDITIONS	MIN	TYP†	MAX	UNIT
E_L	Linearity error				±0.8	%FSR
f_{max}	Maximum conversion rate		20	30		MHz
t_d	Digital output delay time	See Figure 3		15	30	ns

timing diagram

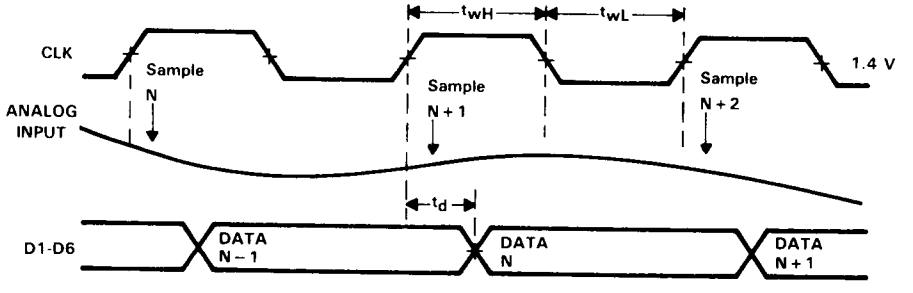

TYPICAL CHARACTERISTICS

IDEAL CONVERSION CHARACTERISTICS

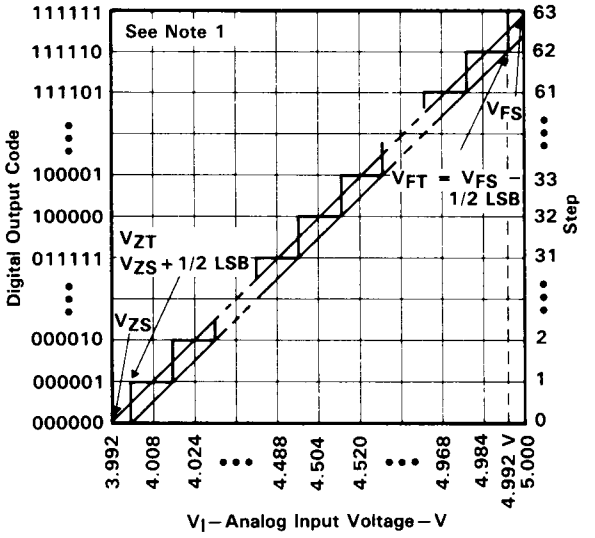

NOTE 1: This curve is based on the assumption that V_{refB} and V_{refT} have been adjusted so that the voltage at the transition from digital 0 to 1 (V_{ZT}) is 4.000 V and the transition to full scale (V_{FT}) is 4.992 V. 1 LSB = 16 mV.

FIGURE 1

END-POINT LINEARITY ERROR

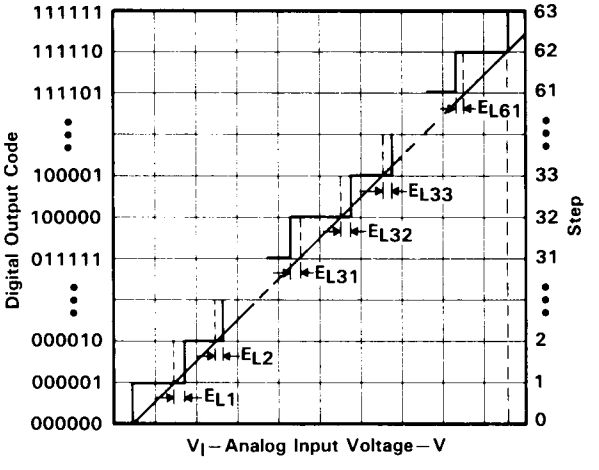

FIGURE 2

PARAMETER MEASUREMENT INFORMATION

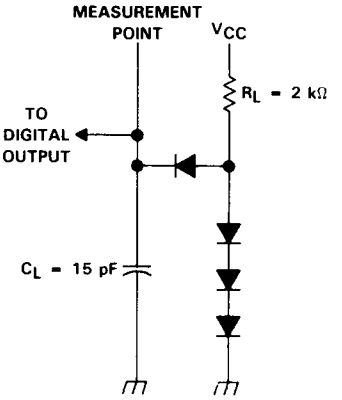

FIGURE 3. LOAD CIRCUIT